4mm Through Hole Lamps

LBL040

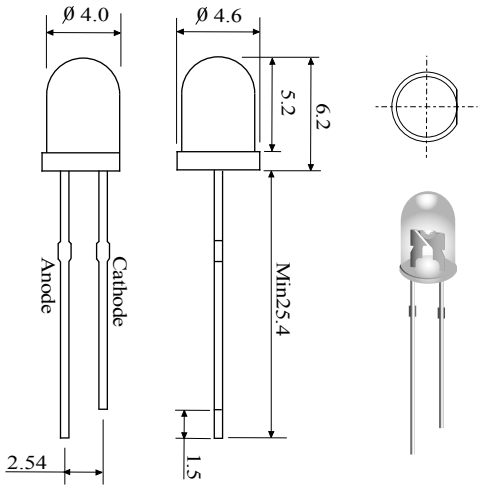

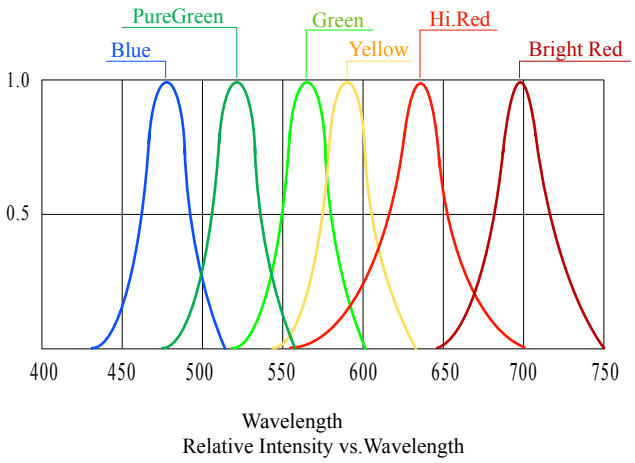

Part no.	Colour	Wave Length	Lens Color (x)	Luminous Intensity (mcd)	Forward Voltage (V)	Forward Current (mA)	0°
LBL040DxI	Red	660		500	2.15	20	25
LBL040CxI	Red	660		1500	2.15	20	25
LBL040AxI-S	Red	623		2500	2.15	20	25
LBL040AxI-U	Red	660		5800	2.15	20	25
LBL040AxI-T	Red	623		7800	2.15	20	25
LBL040KxI	Green	568		500	2.15	20	25
LBL040JxI	Green	568		1500	2.15	20	25
LBL040JxI-S	Green	568		2500	2.15	20	25
LBL040JxI-U	Green	568		6000	2.30	20	25
LBL040IxI	Yellow	589		1300	2.15	20	25
LBL040IxI-S	Yellow	589		2500	2.15	20	25
LBL040IxI-U	Yellow	589		4500	2.15	20	25
LBL040IxI-T	Yellow	589	W- White	7500	2.15	20	25
LBL040FxI	Orange	605	D - Diffused	1500	2.30	20	25
LBL040FxI-S	Orange	605	C - Water Clear	2500	2.30	20	25
LBL040FxI-U	Orange	605	T - Transparent	3500	2.30	20	25
LBL040BGxI	Blue / Green	510		3500	3.60	20	25
LBL040BGxI-U	Blue / Green	510		6500	3.60	20	25
LBL040BLxI	Blue	470		500	3.60	20	25
LBL040BHxI	Blue	470		1600	3.60	20	25
LBL040BUxI	Blue	470		3500	3.60	20	25
LBL040PGxI	Pure Green	525		2500	3.60	20	25
LBL040PGxI-S	Pure Green	525		4000	3.60	20	25
LBL040PGxI-U	Pure Green	525		5500	3.60	20	25
LBL040WHxI	White	----		1300	3.60	20	25
LBL040WUxI	White	----		5200	3.60	20	25