LightBo

5mm Through Hole Lamps

LBL046

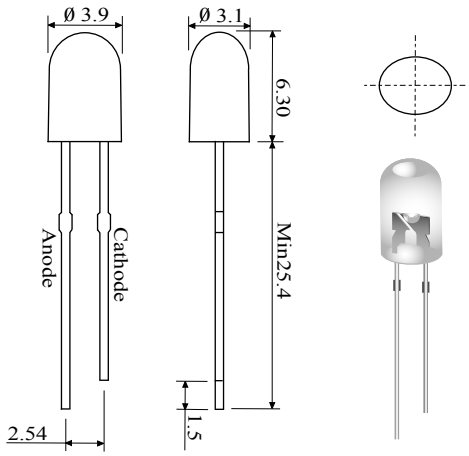

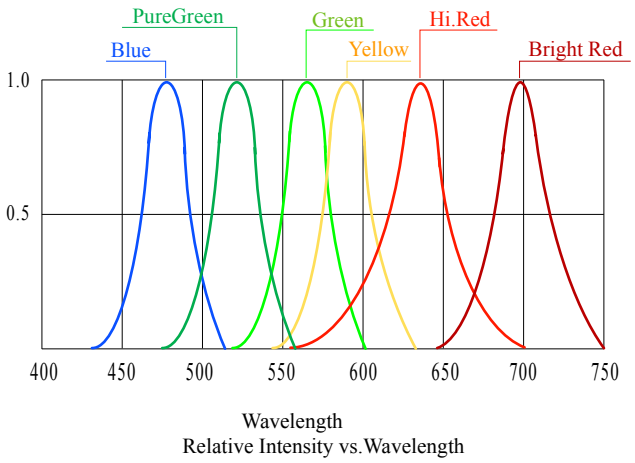

Part no.	Colour	Wave Length	Lens Color (x)	Luminous Intensity (mcd)	Forward Voltage (V)	Forward Current (mA)	0°
LBL046DxI	Red	660		500	2.15	20	75° / 45°
LBL046CxI	Red	660		1500	2.15	20	75° / 45°
LBL046AxI-S	Red	623		2500	2.15	20	75° / 45°
LBL046AxI-U	Red	660		5800	2.15	20	75° / 45°
LBL046AxI-T	Red	623		7800	2.15	20	75° / 45°
LBL046KxI	Green	568		500	2.15	20	75° / 45°
LBL046JxI	Green	568		1500	2.15	20	75° / 45°
LBL046JxI-S	Green	568		2500	2.15	20	75° / 45°
LBL046JxI-U	Green	568		6000	2.30	20	75° / 45°
LBL046IxI	Yellow	589		1300	2.15	20	75° / 45°
LBL046IxI-S	Yellow	589		2500	2.15	20	75° / 45°
LBL046IxI-U	Yellow	589		4500	2.15	20	75° / 45°
LBL046IxI-T	Yellow	589	W- White	7500	2.15	20	75° / 45°
LBL046FxI	Orange	605	D - Diffused	1500	2.30	20	75° / 45°
LBL046FxI-S	Orange	605	C - Water Clear	2500	2.30	20	75° / 45°
LBL046FxI-U	Orange	605	T - Transparent	3500	2.30	20	75° / 45°
LBL046BGxI	Blue / Green	510		3500	3.60	20	75° / 45°
LBL046BGxI-U	Blue / Green	510		6500	3.60	20	75° / 45°
LBL046BLxI	Blue	470		500	3.60	20	75° / 45°
LBL046BHxI	Blue	470		1600	3.60	20	75° / 45°
LBL046BUxI	Blue	470		3500	3.60	20	75° / 45°
LBL046PGxI	Pure Green	525		2500	3.60	20	75° / 45°
LBL046PGxI-S	Pure Green	525		4000	3.60	20	75° / 45°
LBL046PGxI-U	Pure Green	525		5500	3.60	20	75° / 45°
LBL046WHxI	White	----		1300	3.60	20	75° / 45°
LBL046WUxI	White	----		5200	3.60	20	75° / 45°