LightBo

5mm Through Hole Lamps

LBL058

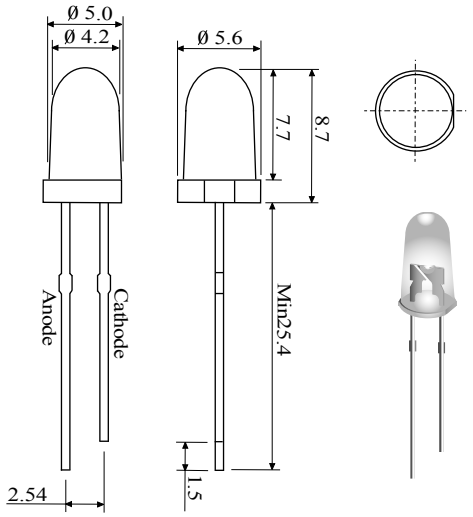

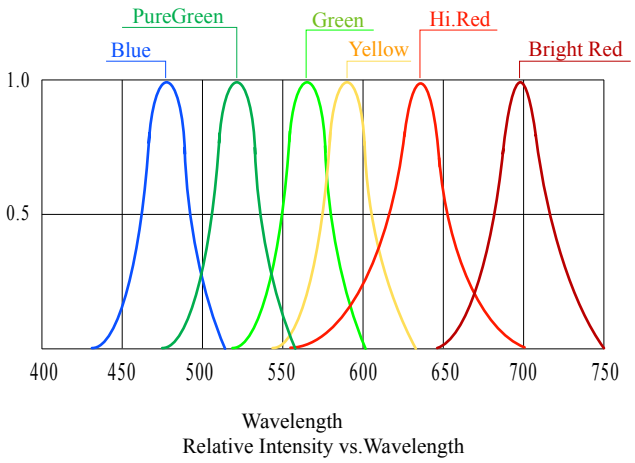

Part no.	Colour	Wave Length	Lens Color (x)	Luminous Intensity (mcd)	Forward Voltage (V)	Forward Current (mA)	0°
LBL058DxI	Red	632		500	2.15	20	15
LBL058CxI	Red	632		1500	2.15	20	15
LBL058AxI-S	Red	632		2500	2.15	20	15
LBL058AxI-U	Red	632		5800	2.15	20	15
LBL058AxI-T	Red	632		7800	2.15	20	15
LBL058KxI	Green	565		500	2.15	20	15
LBL058JxI	Green	565		1500	2.15	20	15
LBL058JxI-S	Green	565		2500	2.15	20	15
LBL058JxI-U	Green	565		6000	3.60	20	15
LBL058IxI	Yellow	589		1300	2.15	20	15
LBL058IxI-S	Yellow	589		2500	2.15	20	15
LBL058IxI-U	Yellow	589		4500	2.15	20	15
LBL058IxI-T	Yellow	589	W- White	7500	2.15	20	15
LBL058FxI	Orange	621	D - Diffused	1500	2.30	20	15
LBL058FxI-S	Orange	621	C - Water Clear	2500	2.30	20	15
LBL058FxI-U	Orange	621	T - Transparent	3500	2.30	20	15
LBL058BGxI	Blue / Green	503		3500	3.60	20	15
LBL058BGxI-U	Blue / Green	503		6500	3.60	20	15
LBL058BLxI	Blue	470		500	3.60	20	15
LBL058BHxI	Blue	470		1600	3.60	20	15
LBL058BUxI	Blue	470		3500	3.60	20	15
LBL058PGxI	Pure Green	525		2500	3.60	20	15
LBL058PGxI-S	Pure Green	525		4000	3.60	20	15
LBL058PGxI-U	Pure Green	525		5500	3.60	20	15
LBL058WHxI	White	----		1300	3.60	20	15
LBL058WUxI	White	----		5200	3.60	20	15