LightBo

2mm x 3mm Rectangular Lamps

LBL0231xx3

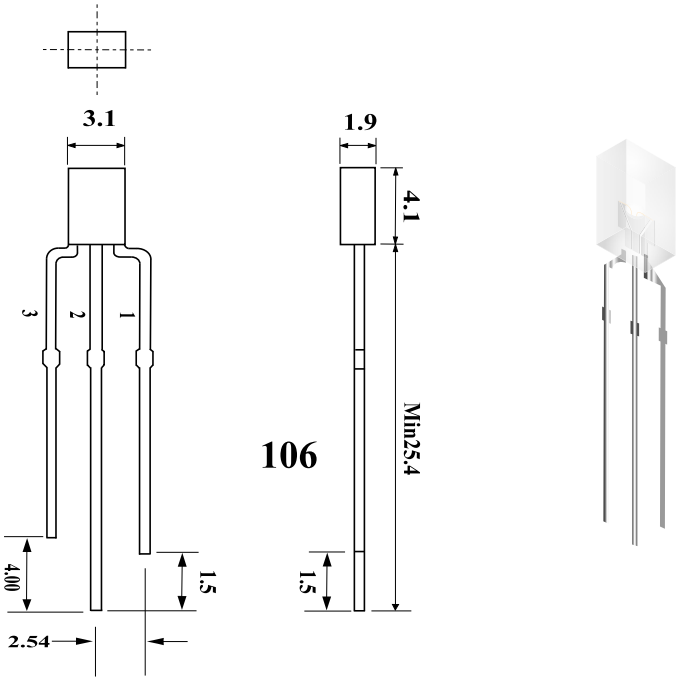

Part no.	Colour	Wave Length	Lens Color (x)	Luminous Intensity (mcd)	Forward Voltage (V)	Forward Current (mA)	0°
LBL0231DKxI-3	Red	632		500	2.15	20	30
	Green	565		500	2.15	20	30
LBL0231CJxI-3	Red	632		1500	2.15	20	30
	Green	565		1500	2.15	20	30
LBL0231AJxI-3	Red	632		2500	2.15	20	30
	Green	565	W- White	2500	2.15	20	30
LBL0231CIxI-3	Red	632	C - Water Clear	1500	2.15	20	30
	Yellow	589		1300	2.15	20	30
LBL0231AIxI-3	Red	632		2500	2.15	20	30
	Yellow	589		2500	2.15	20	30
LBL0231CBHxI-3	Red	632		1500	2.15	20	30
	Blue	470		1600	3.60	20	30
LBL0231ABUxI-3	Red	632		2500	2.15	20	30
	Blue	470		3500	3.60	20	30